Property Location 322 KINGS LANDING | Map ID 57/ 30/ 322/K / | Bldg Name | State Use 1021
Vision ID 100671 | Account # 12632.00 | Bldg # 1 | Sec # 1 of 1 | Card # 1 of 1 | Print Date 04-22-2025 8:32:32 A

CURRENT OWNER	TOPO	UTILITIES	STRT / ROAD	LOCATION
BOSCO RACHEL LEE & BROWNELL				
322 KINGS LANDING				
WINDSOR CT 06095				

SUPPLEMENTAL DATA

Alt Prcl ID	12632	CTRACT	4731.00
INC:		CBLOCK	
GH		FIRE DIST	
		TIF DIST	
2023 Phas	173565	GL YEAR	
GIS ID	12632	Assoc Pid#	

CURRENT ASSESSMENT

Description	Code	Appraised	Assessed
RES CONDO	1-5	299,600	209,720
Total		299,600	209,720

6164

WINDSOR, CT

VISION

RECORD OF OWNERSHIP

	BK-VOL/PAGE		SALE DATE	Q/U	V/I	SALE PRICE	VC
BOSCO RACHEL LEE & BROWNELL SHARO	1979	0077	04-16-2025	Q	I	350,000	00
MARTIN ELAINE & WAYNE JS	1549	0385	05-12-2006	Q	I	272,900	00
COLEY HAZEL & DELANCEY JS	1330	0488	06-06-2002	Q	I	199,900	00
KINGS LANDING LLC	1234	0278	06-30-2000	Q	I	235,000	28
KING BEMVINDA J ESTATE	1158	0394	06-26-1998	U	V	0	

PREVIOUS ASSESSMENTS (HISTORY)

Year	Code	Assessed	Year	Code	Assessed V	Year	Code	Assessed
2024	1-5	209,720	2023	1-5	209,720	2023	1-5	209,720
	Total	209,720		Total	209,720		Total	209,720

EXEMPTIONS

Year	Code	Description	Amount
		Total	0.00

OTHER ASSESSMENTS

Code	Description	Number	Amount	Comm Int

This signature acknowledges a visit by a Data Collector or Assessor

ASSESSING NEIGHBORHOOD

Nbhd	Sub	Nbhd Name	B	Tracing	Batch
0001	A				

NOTES

12632.00 BEIGE WINDSOR KINGS LANDING 55+

57-30-322K

REF: V1250 P1 EASEMENT

REF: V1250 P8 EASEMENT

REF: V1250 P14 EASEMENT

REF: V1262 P236 EASEMENT

APPRAISED VALUE SUMMARY

Appraised Bldg. Value (Card)	299,600
Appraised Xf (B) Value (Bldg)	0
Appraised Ob (B) Value (Bldg)	0
Appraised Land Value (Bldg)	0
Special Land Value	0
Total Appraised Parcel Value	299,600
Valuation Method	C
Total Appraised Parcel Value	299,600

BUILDING PERMIT RECORD

Permit Id	Issue Date	Type	Description	Amount	Insp Date	% Comp	Date Comp	Comments
B-001918	10-01-2002	RS	Residential					FIN 2ND FLOOR
B-001918A	10-01-2001	RS	Residential					HSE 100% COMPL

VISIT / CHANGE HISTORY

Date	Id	Type	Is	Cd	Purpost/Result
05-08-2023	DM			55	Data Mail Chg Town (2023)
03-07-2018	WS			54	Data Mail Chg (2018)
04-13-2017	WS			50	Mailer Return
03-10-2003	SK			50	Mailer Return
02-14-2003	SK			51	1st DM Sent
02-14-2003	SK			51	1st DM Sent
08-23-2002	WS			01	Measur+1Visit

LAND LINE VALUATION SECTION

B	Use Code	Description	Zone	Land Type	Land Units		Unit Price	Size Adj	Site Index	Cond.	Nbhd.	Nbhd. Adj	Notes	Location Adjustment		Adj Unit P	Land Value
1	1021	Condo NL	A		0	SF	0.01	1.00000	0	1.00		1.000			0.0000		0
				Total Card Land Units	0.000	SF	Parcel Total Land Area			0.000						Total Land Value	0

Property Location 322 KINGS LANDING | Map ID 57/ 30/ 322/K / | Bldg Name | State Use 1021
Vision ID 100671 | Account # 12632.00 | Bldg # 1 | Sec # 1 of 1 | Card # 1 of 1 | Print Date 04-22-2025 8:32:33 A

CONSTRUCTION DETAIL

Element	Cd	Description
Style:	55	Condominium
Model	05	Res Condo
Grade	04	Average +10
Stories:	1.75	1 3/4 Stories
Occupancy	1	
Interior Wall 1:	05	Drywall
Interior Wall 2:		
Interior Floor 1	14	Carpet
Interior Floor 2	20	Laminate
Heat Fuel:	03	Gas
Heat Type:	04	Forced Air
AC Type:	03	Central
Ttl Bedrms:	03	3 Bedrooms
Full Baths:	3	3 Full
Half Baths:	0	
Xtra Fixtres		
Total Rooms:	6	6 Rooms
Bath Style:	02	Average
Kitchen Style:	02	Average
Xtra Kitchens:	00	

CONSTRUCTION DETAIL (CONTINUED)

Element	Cd	Description

COMPLEX DATA

Parcel Id	102003	C	15	Owne	
	Kings Landing	B	1	S	1

Adjust Type	Code	Description	Factor%
Unit Style	1	Windsor	87
Unit Locn	1	1	114

COST / MARKET VALUATION

Building Value New	356,697
Year Built	2001
Effective Year Built	
Depreciation Code	A
Remodel Rating	
Year Remodeled	
Depreciation %	16
Functional Obsol	0
External Obsol	0
Trend Factor	1
Condition	
Condition %	
Percent Good	84
Cns Sect Rcnld	299,600
Dep % Ovr	
Dep Ovr Comment	
Misc Imp Ovr	
Misc Imp Ovr Comment	
Cost to Cure Ovr	
Cost to Cure Ovr Comment	

OB - OUTBUILDING & YARD ITEMS(L) / XF - BUILDING EXTRA FEATURES(B)

Code	Descript	Sub	Sub Ty	L/B	Units	Unit Pric	Yr Blt	Cond. C	% Gd	Grade	Grade A	Appr. V

BUILDING SUB-AREA SUMMARY SECTION
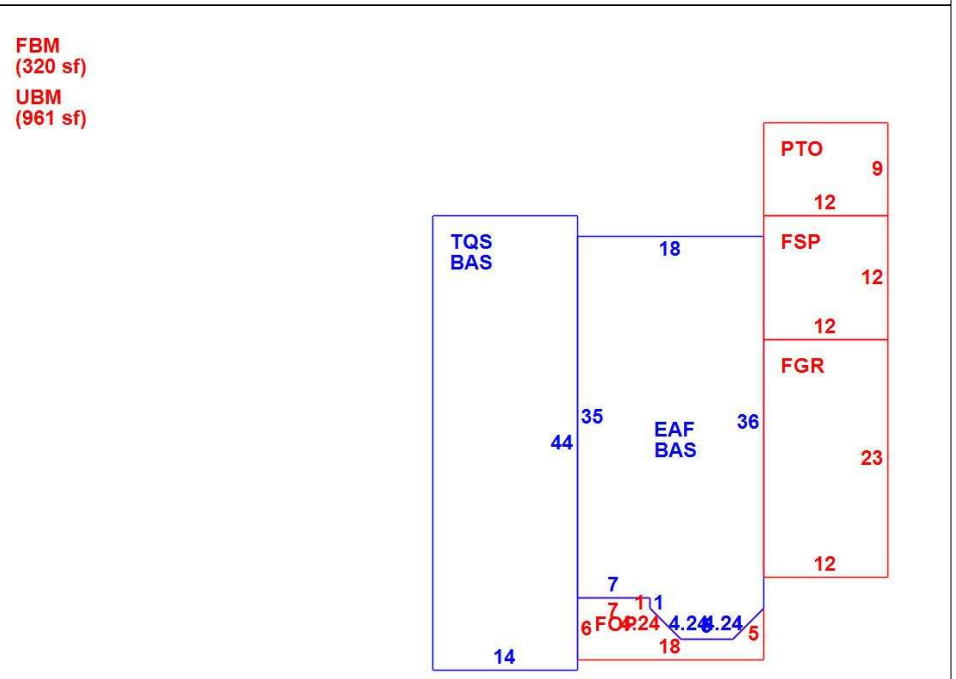
Code	Description	Living Area	Floor Area	Eff Area	Unit Cost	Undeprec Value
BAS	First Floor	1,281	1,281		134.88	172,784
EAF	Attic, Expansion, Finished	266	665		53.95	35,879
FBM	Basement, Finished	0	320		60.70	19,423
FGR	Garage	0	276		53.76	14,837
FOP	Porch, Open	0	73		27.72	2,023
FSP	Porch, Screen	0	144		33.72	4,856
PTO	Patio	0	108		13.74	1,484
TQS	Three Quarter Story	493	616		107.95	66,497
UBM	Basement, Unfinished	0	961		26.95	25,897
	Ttl Gross Liv / Lease Area	2,040	4,444			343,680